DIMAC

H Series
NC Roll Feeding Machine

for high speed stamping presses

MODEL ***H07 / H13 / H25***

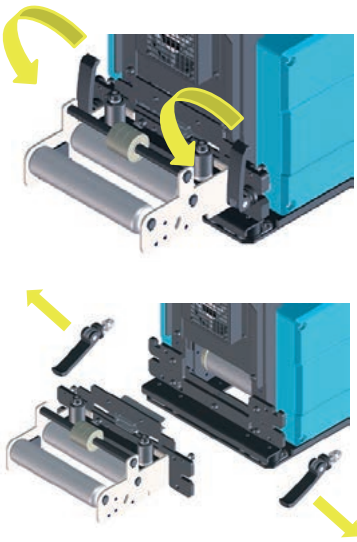

H Series with RV

Product specifications

Model H07

Max. Material width	～75mm
Max. Material thickness	～1.2mm
Max. Feed length	～999.99mm
Max. Stamp speed	～1000spm
Required power supply	AC200V ±10% 50/60Hz 3-phase AC200V ±10% 50/60Hz
Weight	34kg
Pass line	78mm

Model H13

Max. Material width	～130mm
Max. Material thickness	～1.6mm
Max. Feed length	～999.99mm
Max. Stamp speed	～1000spm
Required power supply	AC200V ±10% 50/60Hz 3-phase AC200V ±10% 50/60Hz
Weight	52kg
Pass line	98mm

Model H25

Max. Material width	～250mm
Max. Material thickness	～1.6mm
Max. Feed length	～999.99mm
Max. Stamp speed	～700spm
Required power supply	AC200V ±10% 50/60Hz 3-phase AC200V ±10% 50/60Hz
Weight	66kg
Pass line	98mm

＊1
Standard Model

＊2
The lower roll is a release roll, the pass line is lowered with the thickness of the material.

H Series Options

H-RV Series NC Roll Feeding Machine

It is an option that removes apron bracket by cam lever.
The feed roll can be easily inspected and cleaned.

Apron Bracket Detachable method

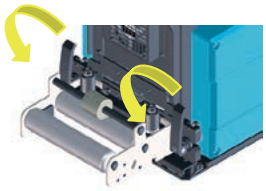

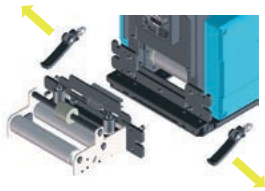

H Series with RV

NC Separate-Roll Feeding Machine

It is possible for two ring-rolls to clamp the positions that you selected, which is useful to feed a secondary processed products and suitable to escape a release mark.

H Series Separate roll with RV

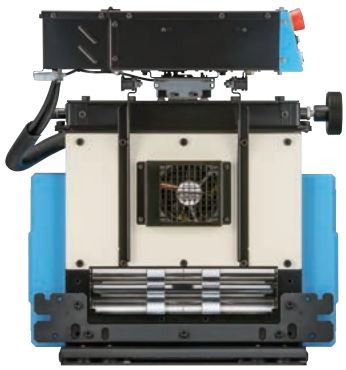

Controller options

DS6

Feed direction change

FF6

Feed completion output

TC6

Feed conditions measurement

MP6

Data bank

BS6

Feed-during output

RC6A

Remote box

Control panel display function

430C
Controller

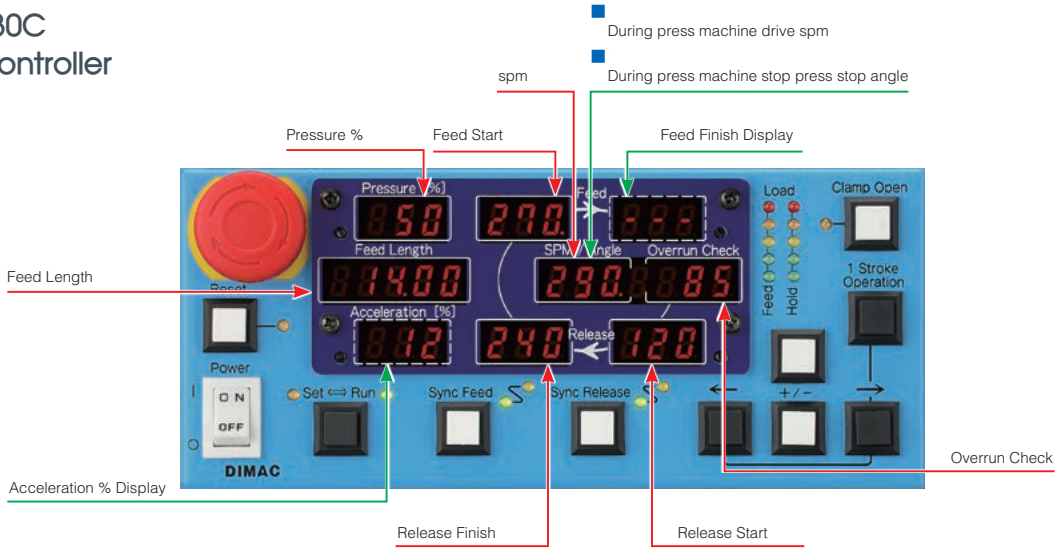

Feed Performance Table

H07		
Feed angle Setting value	180°	210°
spm	Feed length (mm)	
1000	*5.8	*9.5
950	*6.8	*11.0
900	*8.1	*13.0
850	9.7	*15.3
800	11.6	*18.1
750	14.1	*21.6
700	17.1	25.9
650	20.9	31.4
600	25.9	38.6
550	32.5	47.9
500	41.4	59.3
450	53.3	73.3
400	68.3	90.8
350	87.6	113.3
300	113.3	143.2
250	149.2	185.2
200	203.2	248.2

H13		
Feed angle Setting value	180°	210°
spm	Feed length (mm)	
1000	*5.1	*8.4
950	*6.1	*9.8
900	*7.2	*11.5
850	8.6	*13.5
800	10.3	*16.0
750	12.4	*19.1
700	15.1	23.0
650	18.5	27.8
600	23.0	34.1
550	28.8	42.4
500	36.7	53.5
450	47.6	68.3
400	63.0	86.9
350	83.5	110.8
300	110.8	142.7
250	149.1	187.3
200	206.4	254.2

H25		
Feed angle Setting value	180°	210°
spm	Feed length (mm)	
700	11.3	*17.2
650	13.9	20.9
600	17.2	25.6
550	21.6	31.8
500	27.5	40.1
450	35.7	51.6
400	47.4	68.1
380	53.3	76.6
360	60.7	86.4
340	69.4	97.3
320	79.8	109.6
300	91.7	123.6
280	105.4	139.5
260	121.1	157.9
240	139.5	179.3
220	161.2	204.7
200	187.3	235.1

Depending on the starting angle and acceleration of the press machine, the release operation may not be able to follow up.

Precautionary Remarks on Instllation

- For the product details and installation conditions, refer to the specifications of separate sheet.
- Notations on control panel are in English and signs only.
- When this machine is exported, make sure that the machine is provided with safeguards required in the destination country.
  Example:The electric power supply to this machine is 3-phase 200V±10%・50/60Hz only. Not available option which suited the local power supply.
- It's necessary that the exclusive use rotation sensor is installed.
- Specifications in this catalog are subject to change for machine improvements without prior notice.
- Before using the machine, read the safety instruction in the instruction manual.

VENDAR
via E. Mattei 58
35020 Sant'Angelo di Piove (PD)
P.iva IT05512270280